PART NUMBER	ITEM ① BODY	ITEM ② CONTACT	ITEM ③ INSULATOR
142-0594-001	BRASS GOLD PL .00001 MIN OVER NICKEL PL .00005 MIN OVER COPPER PL .00005 MIN	BERYLLIUM COPPER GOLD PL .00003 MIN OVER NICKEL PL .00005 MIN OVER COPPER PL .00005 MIN	TEFLON
142-0594-006	BRASS NICKEL PL .0001 MIN OVER COPPER PL .00005 MIN	BERYLLIUM COPPER GOLD PL .00003 MIN OVER NICKEL PL .00005 MIN OVER COPPER PL .00005 MIN	TEFLON

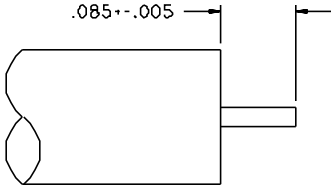

CABLE STRIP DIMENSIONS

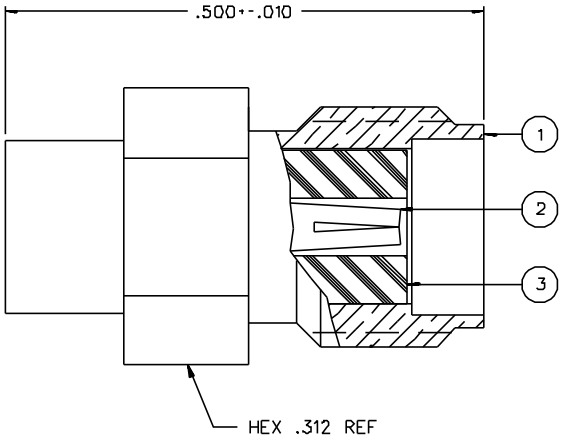

NOTES:

1. SPECIFICATIONS:

IMPEDANCE: 50 OHMS
FREQUENCY RANGE: 0-18.0 GHZ
VSWR: 1.05+.0DBF MAX (F IN GHZ)
WORKING VOLTAGE: 500 VRMS MAX AT SEA LEVEL
DIELECTRIC WITHSTANDING VOLTAGE: 1500 VRMS MIN AT SEA LEVEL
INSULATION RESISTANCE: 5000 MEGOHM MIN
CONTACT RESISTANCE:
CENTER CONTACT - INITIAL 3.0 MILLIOHM MAX, AFTER ENVIRONMENTAL 4.0 MILLIOHM MAX
OUTER CONDUCTOR - INITIAL 2.0 MILLIOHM MAX AFTER ENVIRONMENTAL NOT APPLICABLE
BODY TO CABLE - 0.5 MILLIOHM MAX
CORONA LEVEL: 375 VOLTS MIN AT 70,000 FEET
INSERTION LOSS: $\sqrt{.03F}$ (F IN GHZ) AT 10 GHZ
RF LEAKAGE: -90 DB MIN AT 2 TO 3 GHZ
RF HIGH POTENTIAL WITHSTANDING VOLTAGE: 1000 VRMS MIN AT 5 TO 7.5 MHZ

MECHANICAL:

ENGAGE/DISENGAGE TORQUE: 2 INCH-POUNDS MAX
MATING TORQUE: 7-10 INCH POUNDS
COUPLING PROOF TORQUE: NOT APPLICABLE
COUPLING NUT RETENTION: NOT APPLICABLE
CONTACT RETENTION: NOT APPLICABLE
CABLE ACCEPTABILITY: RG 402 DIA .141 SEMI RIGID
CABLE HEX CRIMP SIZE: NOT APPLICABLE
CABLE RETENTION: 60 LBS MIN AXIAL FORCE
55 INCH-OUNCE MIN TORQUE
DURABILITY: 500 CYCLES MIN

ENVIRONMENTAL:

(MEETS OR EXCEEDS THE APPLICABLE PARAGRAPH OF MIL-PRF-39012)
THERMAL SHOCK: MIL-STD-202, METHOD 107, CONDITION B,
EXCEPT 115° C HIGH TEMP
OPERATING TEMPERATURE: -65 DEG C TO 165 DEG C
CORROSION: MIL-STD-202, METHOD 101, CONDITION B
SHOCK: MIL-STD-202, METHOD 213, CONDITION I
VIBRATION: MIL-STD-202, METHOD 204, CONDITION D
MOISTURE RESISTANCE: MIL-STD-202, METHOD 106

DRAWING NO. C-142-0594-001/010

0	REVISIONS		
	ENGINEERING RELEASE		
1	12-06-88	EJ IAK RJB AAW	12-14-88 ECO 23717
	VERSION UPDATE		
2	03-09-89	EJ IAK RJB AAW	04-10-89 ECO 23882
	ADDED: 115° C HIGH TEMP TO THERMAL SHOCK SPEC.		
3	06-06-90	EJ CD RJB AAW	7-3-90 ECO 24436
	CHANGED: .085+-.005 WAS .085+-.015. 10 GHZ WAS 9 TO 12 GHZ. DELETED: .424+-.010 ADDED: HEX .312 REF		
4	11-18-90	RH RJB	11-26-90 ECO 24971
	VERSION UPDATE		
5	9-6-91	DB RJB	ECO 40499
	UPDATED COMPANY LOGOS		
	* REVISION NUMBER FOLLOWED BY AN ALPHA * CHARACTER INDICATES DRAWING CLARIFICATION OR PART NUMBER ADDITION ONLY. *		
5a	5-2-02	RJB	5-24-02 ECN 48386

CUSTOMER DRAWING

THIS DRAWING TO BE INTERPRETED PER ANSI Y 14.5M - 1982

"μSTATION"

COMPANY CONFIDENTIAL

TOLERANCE UNLESS OTHERWISE SPECIFIED		DRAWN BY RER	DATE 2-19-87	Johnson Components 299 Johnson Ave. P.O. Box 1732 Waseca, MN 56093-0832	
DECIMALS .XX	mm	CHECKED BY	DATE	TITLE JACK ASSEMBLY, STR CABLED, SMA, RG 402	
.XXX		APPROVED BY TAK	DATE 12-7-88		
MATL		APPROVED BY RJB	DATE 12-7-88	CODE NO.	DRAWING NO. C-142-0594-001/010
FINISH		RELEASE DATE	12-14-88	SCALE 10:1	U/M INCH SHEET 2 OF 2